A11284-3

PACKED BY :

DATE : 17/7/15

ITEM	DESCRIPTION	QTY	MATERIAL	FILENAME	DR	INCLUDED
1	BELT, POLY-RIB, 6PK1905	1	AS SUPPLIED	BELT POLY-RIB 6PK1905	-	✓
2	BOLT, M6 x 90mm, HEX HEAD	2	MILD STEEL	M6X90	-	✓
3	CABLE, MINI USB TO USB, 1M, UC2-MINI2OEM	1	AS SUPPLIED	CABLE USB	-	✓
4	CLAMP, COBRA, FUEL INJECTION, 22mm, NORMA, 65-COBRA-22/8-W4	4	AS SUPPLIED	CLMP COBRA C22-8 NORMA	-	✓
5	CLAMP, COBRA, FUEL INJECTION, 36mm, NORMA	1	AS SUPPLIED	CLMP COBRA C36	-	✓
6	CLAMP, HOSE, 117-140mm, STAINLESS STEEL, •80	1	AS SUPPLIED	CLAMP HOSE 117-140MM SIZE-80	-	✓
7	CLIP, SPRING, 12MM ID, NORMACLAMP UM5077-10	4	AS SUPPLIED	CLIP SPRING 12MM	-	✓
8	CONTROLLER, BYPASS, S65 E92 M3	1	AS SUPPLIED	BPASS CONTROLLER	-	✓
9	DEVICE, USB MINI TO OBE, 65-FRCxFLASH	1	AS SUPPLIED	CONNECTOR USB OBD	-	✓
10	FEAD, SUPERCHARGER, S65 E92 M3, BMW	1	REFER TABLE	PLT FEAD SC S65-E92 M3 A11364	A11364-0	✓
11	FITTING, IAC, DUCT, E9X M3, BMW	1	2011 ALUMINIUM	FIT IAC DUCT E9X M3 11920	11920-0	✓
12	FUEL INJECTOR, BOSCH, 0280155892	8	AS SUPPLIED	INJECTOR BOSCH 0280155892 12362	12362-0	
13	HOSE, ∅8.0mm, AUTOMOTIVE, 120mm	1	AS SUPPLIED	HOSE 8-0 VACUUM 120-LONG	-	✓
14	HOSE, MOULDED, FUEL VAPOR, 5/8" AUTOMOTIVE, 420MM	1	RUBBER	HOS MOULDED 5-8 12006	12006-0	✓
15	HOSE, MOULDED, FUEL VAPOR, 5/8", 340MM	1	RUBBER	HOS MOULDED 5-8 12007	12007-0	✓
16	HOSE, MOULDED, FUEL VAPOR, 8MM ID, 230MM	1	RUBBER	HOS MOULDED 8ID	12003-0	✓
17	KIT, INSTALLATION, SUPERCHARGER, S65 ENGINE, E92 M3, BMW	1	REFER TABLE	KIT INST S65 M3 A11284	A11284-3	✓
18	LOOM, INTAKE AIR TEMP, BMW M3	1	REFER TABLE	LOOM IAT M3 11907	A11907-0	✓
19	MOUNT, FRONT, SUPERCHARGER, FDF11320, S65, M3	1	5083 ALUMINIUM	MNT FRT SC S65-M3 11279	11279-0	✓
20	MOUNT, FUEL PURGE, S65, M3, BMW	1	6061 ALUMINIUM	MNT PURGE TNK S65 M3 11884	11884-0	✓
21	MOUNT, MANIFOLD, SUPERCHARGER, S65 E92 M3, BMW	4	2011 ALUMINIUM	MNT SCHGR MANI S65-M3 11365	11365-0	✓
22	PLATE, SETUP, SUPERCHARGER MOUNTS, E9X M3, BMW	1	6061 ALUMINIUM	PLT SETUP MNT SC E9X-M3 12001	12001-0	✓
23	QUICK CONNECT, 90 DEG, NORMAQUICK V2 NW27-90	1	AS SUPPLIED	NORMAQUICK V2 NW 27-90	-	✓
24	SCREW, CAP, SOCKET HEAD, M6 x 100, ZINC PLATED	1	AS SUPPLIED	SH M6X100	-	✓
25	SCREW, CAP, SOCKET HEAD, M6 x 25, ZINC PLATED	4	AS SUPPLIED	SH M6X25	-	✓
26	SCREW, SOCKET HEAD CAP, M6 x 50	4	AS SUPPLIED	SH M6X50	-	✓
27	TIE, CABLE, 150x3.2mm, BLACK	6	AS SUPPLIED	TIE CABLE 150X3-2	-	✓
28	TUBE, INLET, SUPERCHARGER, E9X M3, BMW	1	BLACK SILICON RUBBER	TUBE IN SCHRGR E9X-M3 BMW 11990	11990-0	✓
29	VALVE, 1 WAY, FUEL VAPOR, PROTEX JP13	1	AS SUPPLIED	1 WAY FUEL VALVE	JP13	✓
30	WASHER, 1/4" I.D. x 1/2" O.D.	4	AS SUPPLIED	WAS 1-4 1-2-OD	-	✓
31	WASHER, ∅6 x ∅12.2 x 1mm, ZINC PLATED	2	MILD STEEL	WAS 6MM 12-2-OD	-	✓

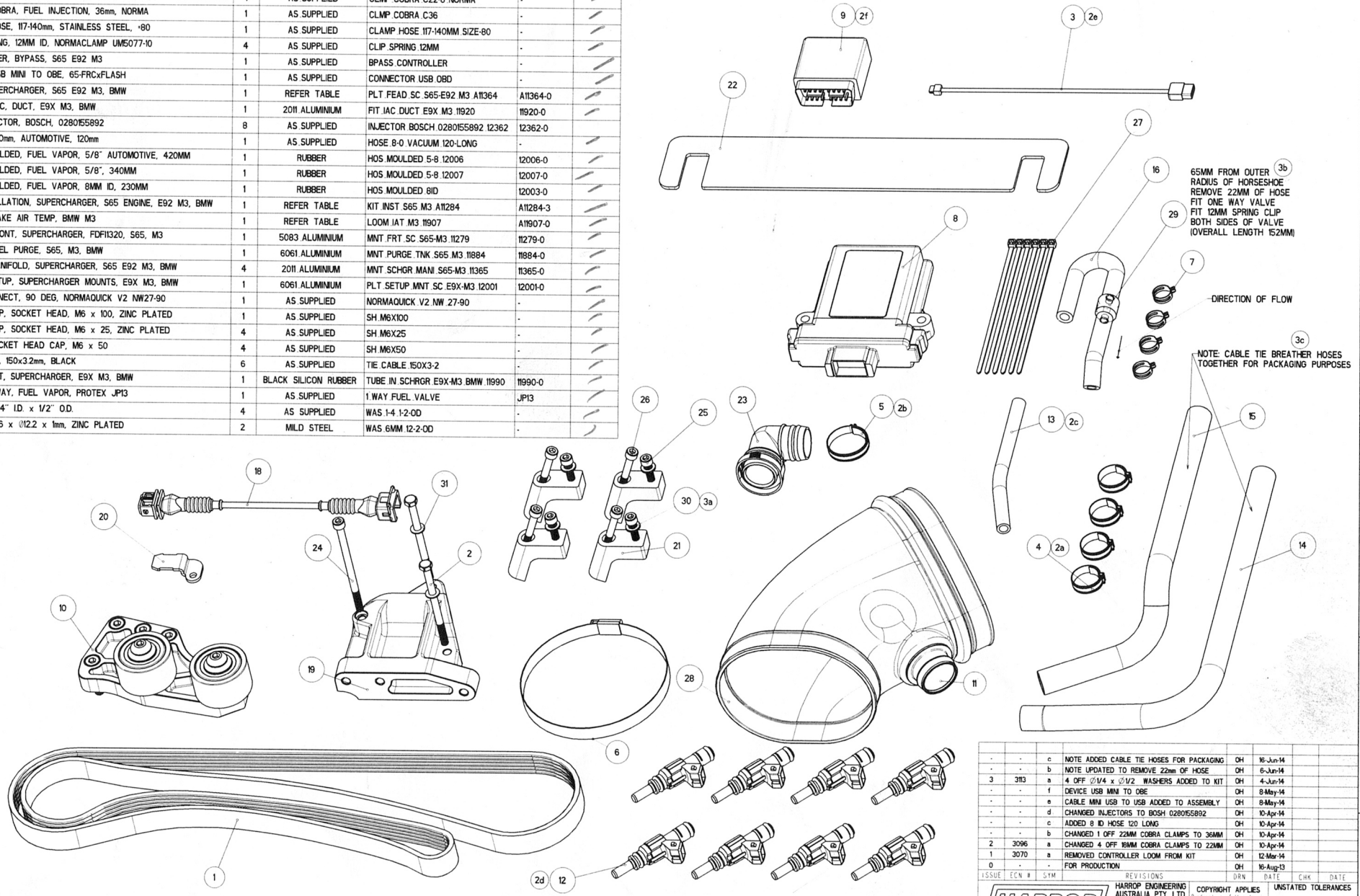

ISSUE	ECN #	SYM	REVISIONS	DRN	DATE	CHK	DATE
-	-	c	NOTE ADDED CABLE TIE HOSES FOR PACKAGING	OH	16-Jun-14		
-	-	b	NOTE UPDATED TO REMOVE 22mm OF HOSE	OH	6-Jun-14		
3	3113	a	4 OFF ∅1/4 x ∅1/2 WASHERS ADDED TO KIT	OH	4-Jun-14		
-	-	f	DEVICE USB MINI TO OBE	OH	8-May-14		
-	-	e	CABLE MINI USB TO USB ADDED TO ASSEMBLY	OH	8-May-14		
-	-	d	CHANGED INJECTORS TO BOSH 0280155892	OH	10-Apr-14		
-	-	c	ADDED 8 ID HOSE 120 LONG	OH	10-Apr-14		
-	-	b	CHANGED 1 OFF 22MM COBRA CLAMPS TO 36MM	OH	10-Apr-14		
2	3096	a	CHANGED 4 OFF 18MM COBRA CLAMPS TO 22MM	OH	10-Apr-14		
1	3070	a	REMOVED CONTROLLER LOOM FROM KIT	OH	12-Mar-14		
0	-	-	FOR PRODUCTION	OH	16-Aug-13		

HARROP engineering

HARROP ENGINEERING AUSTRALIA PTY. LTD.
96 BELL ST
PRESTON, 3072
VICTORIA, AUSTRALIA
Ph. (613) 9474-0900
Fax. (613) 9474-0999

COPYRIGHT APPLIES
Duplication of this drawing or any specific design features is not permitted without written authority. Commercial Confidentiality is assumed and required.

UNSTATED TOLERANCES
LINEAR 0 ± 0.25 / 0.0 ± 0.1 / 0.00 ± 0.05
ANGULAR 0.0 ± 0.5° / 0.00 ± 0.05°

-REMOVE ALL SHARP EDGES AND BURRS UNLESS OTHERWISE STATED
-ALL INTERNAL CORNERS TO BE R0.8 UNLESS OTHERWISE STATED

KIT, INSTALLATION, SUPERCHARGER, S65 ENGINE, E92 M3, BMW

FILE : HARROP SUPERCHARGERS KIT INST S65 M3 A11284

MASS : kg (at S.G.)

MATERIAL REFER TABLE

FINISH REFER TABLE

ProENGINEER DIGITAL DATA AVAILABLE

SCALE 0.45 ON A2

SHEET 1 OF 1

DRAWING A11284-3

A11284-3

A2

NAME:OSCAR OBJECT:KIT_INST_S65_M3_A11284 DATE:16-Jun-14 13:32:40