DWG NO. 334-0002-00-19 SH 1 REV 110

NOTES: UNLESS OTHERWISE SPECIFIED

1. MATERIAL:
2. FINISH:
3. PART TO BE FREE FROM BURRS OF SHARP EDGES.
4. BAT ITEMS AND IDENTIFY IAW MIL-STD-130, INCLUDE CURRENT REV LEVEL:

REVISIONS				
ZONE	REV	DESCRIPTION	DATE	APPROVED
	100	INITIAL RELEASE	3/5/2007	
	110	REVISED PER ECN 100300	7/12/07	

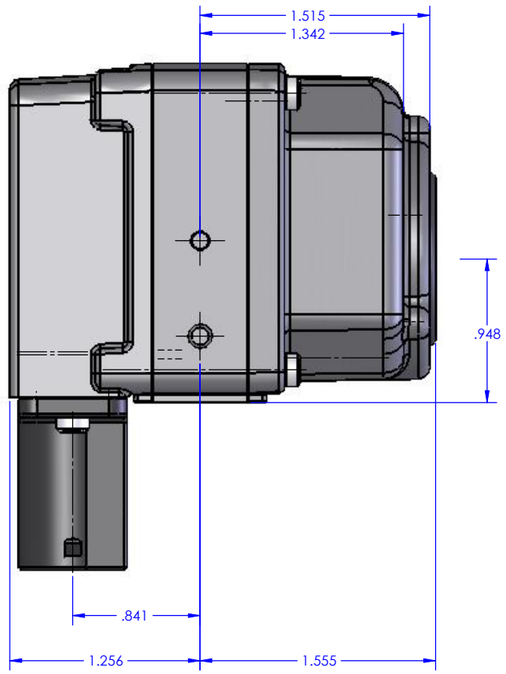

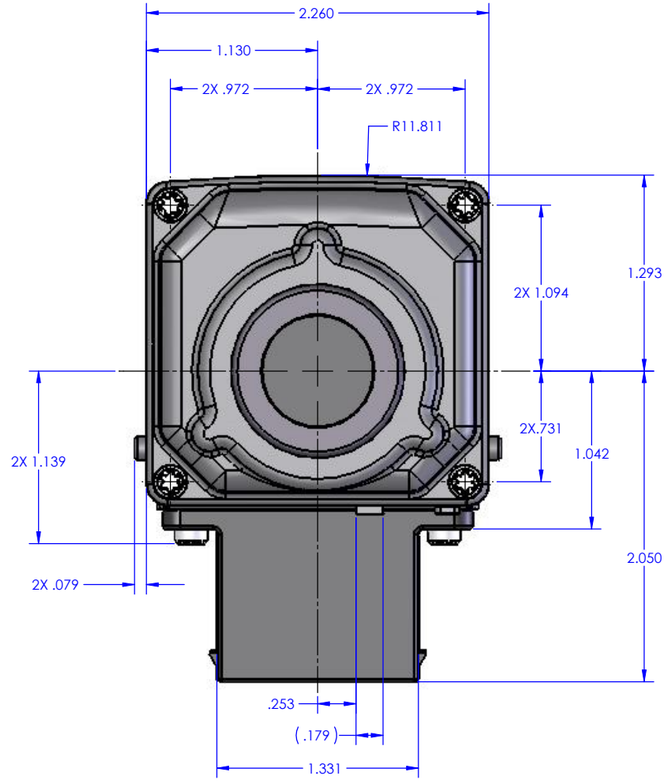

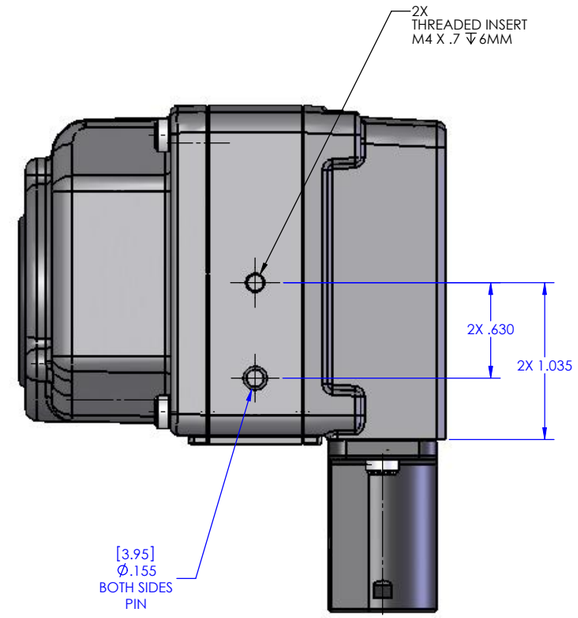

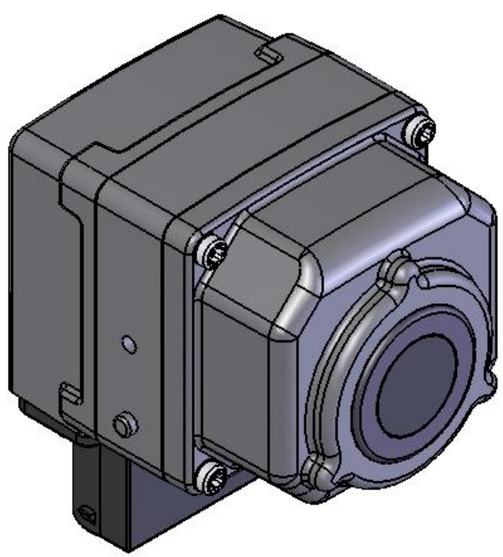

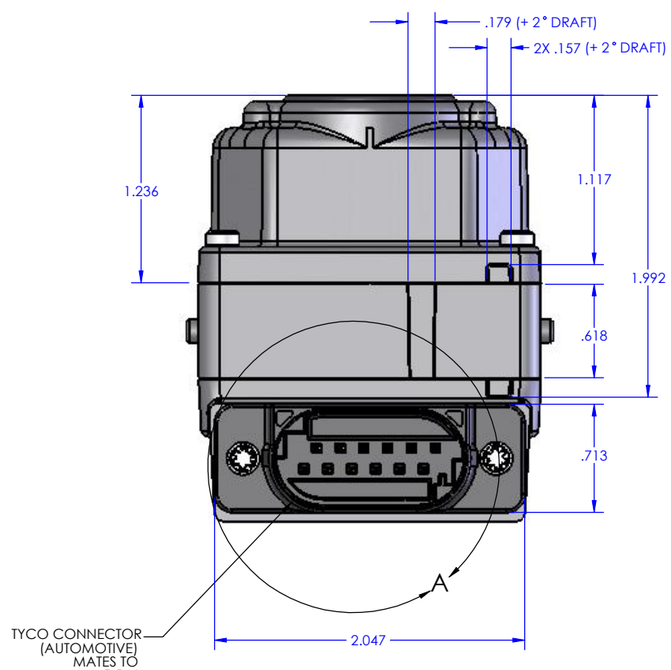

PIN 1 - POWER RET
PIN 2 - GND
PIN 3 - DATA L
PIN 4 - FSYNC L
PIN 5 - CLK L
PIN 6 - VIDEO L
PIN 7 - POWER IN
PIN 8 - LIN
PIN 9 - DATA H
PIN 10 - FSYNC H
PIN 11 - CLK H
PIN 12 - VIDEO H

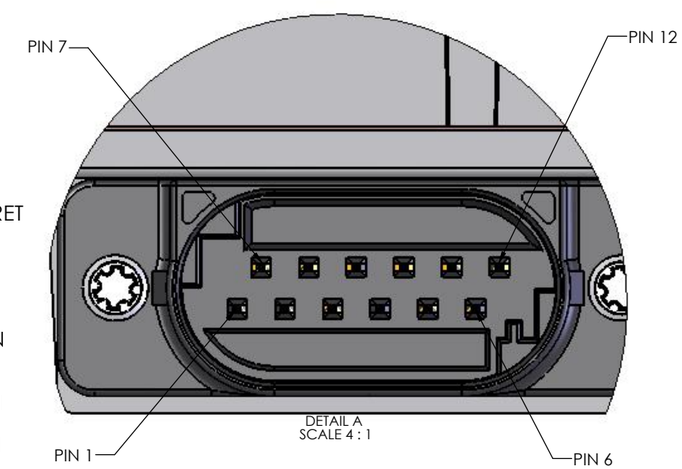

DETAIL A
SCALE 4 : 1

THIRD ANGLE PROJECTION

THIS DOCUMENT IS CONTROLLED TO FLIR TECHNOLOGY CONTROL LEVEL 0 AND IS CONSIDERED PUBLIC DOMAIN

INFORMATION CONTAINED IN THIS DOCUMENT IS THE PROPERTY OF FLIR SYSTEMS, INC.

INTERPRET DRAWING PER ASME Y14.5M-1994

UNLESS OTHERWISE SPECIFIED
SURFACE ROUGHNESS 32
.X = ±.1
.XX = ±
.XXX = ±
ANGULAR = ±.5°
FILLET RADII = .005 MAX

MATERIAL: SEE NOTE 1
FINISH: SEE NOTE 2
UNLESS OTHERWISE SPECIFIED ALL MEASUREMENTS ARE IN INCHES. ALL DIMENSIONS IN [ ] ARE MM. DO NOT SCALE DRAWING.
CALC WT: LBS

PROJECT NO.

APPROVALS		DATE
DWN	K.TAKEUCHI	11/14/05
CHK		
DSGN		
ENG		
APP		08/10/07

FLIR SYSTEMS
Indigo Operations
70 Castilian Drive
Goleta, CA 93117

TITLE: O&M, NV1 CORE

SIZE D | CAGE 064Y2 | DWG NO. 334-0002-00-19 | REV 110

SCALE 1:1 | PRINTED: 8/31/2007 | SHEET 1 OF 1

SOLIDWORKS MODEL: 334-0002-00
MODEL REVISION: P01-WC

DWG NO. 334-0002-00-19 SH REV 110